- **Low Power Consumption**
- **Wide Common-Mode and Differential Voltage Ranges**
- **Low Input Bias and Offset Currents**
- **Output Short-Circuit Protection**
- **Low Total Harmonic Distortion 0.003% Typ**
- **Low Noise V_n = 18 nV/√Hz Typ at f = 1 kHz**
- **High Input Impedance . . . JFET Input Stage**
- **Internal Frequency Compensation**
- **Latch-Up-Free Operation**
- **High Slew Rate . . . 13 V/µs Typ**
- **Common-Mode Input Voltage Range Includes V_{CC+}**

description

The JFET-input operational amplifiers in the TL07_ series are designed as low-noise versions of the TL08_ series amplifiers with low input bias and offset currents and fast slew rate. The low harmonic distortion and low noise make the TL07_ series ideally suited for high-fidelity and audio preamplifier applications. Each amplifier features JFET inputs (for high input impedance) coupled with bipolar output stages integrated on a single monolithic chip.

The C-suffix devices are characterized for operation from 0°C to 70°C. The I-suffix devices are characterized for operation from –40°C to 85°C. The M-suffix devices are characterized for operation over the full military temperature range of –55°C to 125°C.

AVAILABLE OPTIONS

T_A	V_{IO}max AT 25°C	PACKAGE							
		SMALL OUTLINE (D)†	CHIP CARRIER (FK)	CERAMIC DIP (J)	CERAMIC DIP (JG)	PLASTIC DIP (N)	PLASTIC DIP (P)	TSSOP PACKAGE (PW)	FLAT PACKAGE (W)
0°C to 70°C	10 mV	TL071CD	—	—	—	—	TL071CP	TL071CPWLE	—
	6 mV	TL071ACD					TL071ACP	—	
	3 mV	TL071BCD					TL071BCP	—	
	10 mV	TL072CD	—	—	—	—	TL072CP	TL072CPWLE	—
	6 mV	TL072ACD					TL072ACP	—	
	3 mV	TL072BCD					TL072BCP	—	
	10 mV	TL074CD	—	—	—	TL074CN	—	TL074CPWLE	—
	6 mV	TL074ACD				TL074ACN		—	
	3 mV	TL074BCD				TL074BCN		—	
–40°C to 85°C	6 mV	TL071ID	—	—	—	—	TL071IP	—	—
		TL072ID				—	TL072IP		
		TL074ID				TL074IN	—		
–55°C to 125°C	6 mV	—	TL071MFK	—	TL071MJG	—	—	—	—
	6 mV		TL072MFK	—	TL072MJG	—	TL072MP		—
	9 mV		TL074MFK	TL074MJ	—	TL074MN	—		TL074MW

† The D package is available taped and reeled. Add the suffix R to the device type (e.g., TL071CDR). The PW package is only available left-ended taped and reeled (e.g., TL072CPWLE).

Please be aware that an important notice concerning availability, standard warranty, and use in critical applications of Texas Instruments semiconductor products and disclaimers thereto appears at the end of this data sheet.

PRODUCTION DATA information is current as of publication date. Products conform to specifications per the terms of Texas Instruments standard warranty. Production processing does not necessarily include testing of all parameters.

Copyright © 1996, Texas Instruments Incorporated

TL071, TL071A, TL071B
D, JG, P, OR PW PACKAGE
(TOP VIEW)

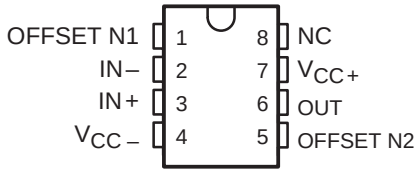

TL072, TL072A, TL072B
D, JG, P, OR PW PACKAGE
(TOP VIEW)

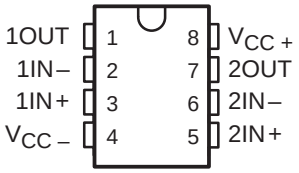

TL074, TL074A, TL074B
D, J, N, OR PW PACKAGE
TL074 . . . W PACKAGE
(TOP VIEW)

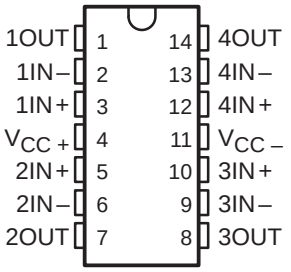

TL071
FK PACKAGE
(TOP VIEW)

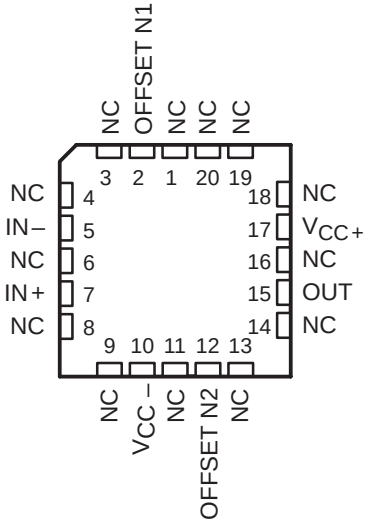

TL072
FK PACKAGE
(TOP VIEW)

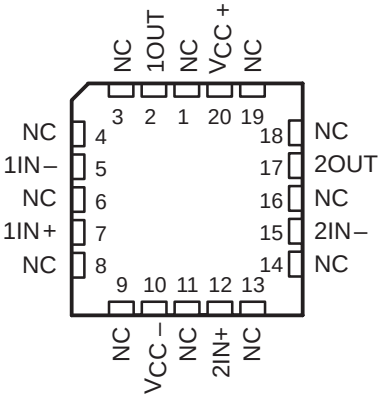

TL074
FK PACKAGE
(TOP VIEW)

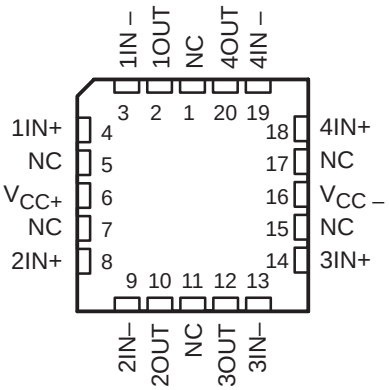

NC – No internal connection

symbols

TL071

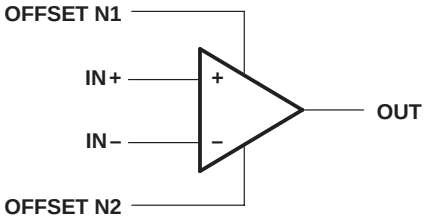

TL072 (each amplifier)
TL074 (each amplifier)

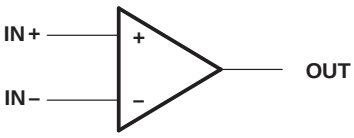

schematic (each amplifier)

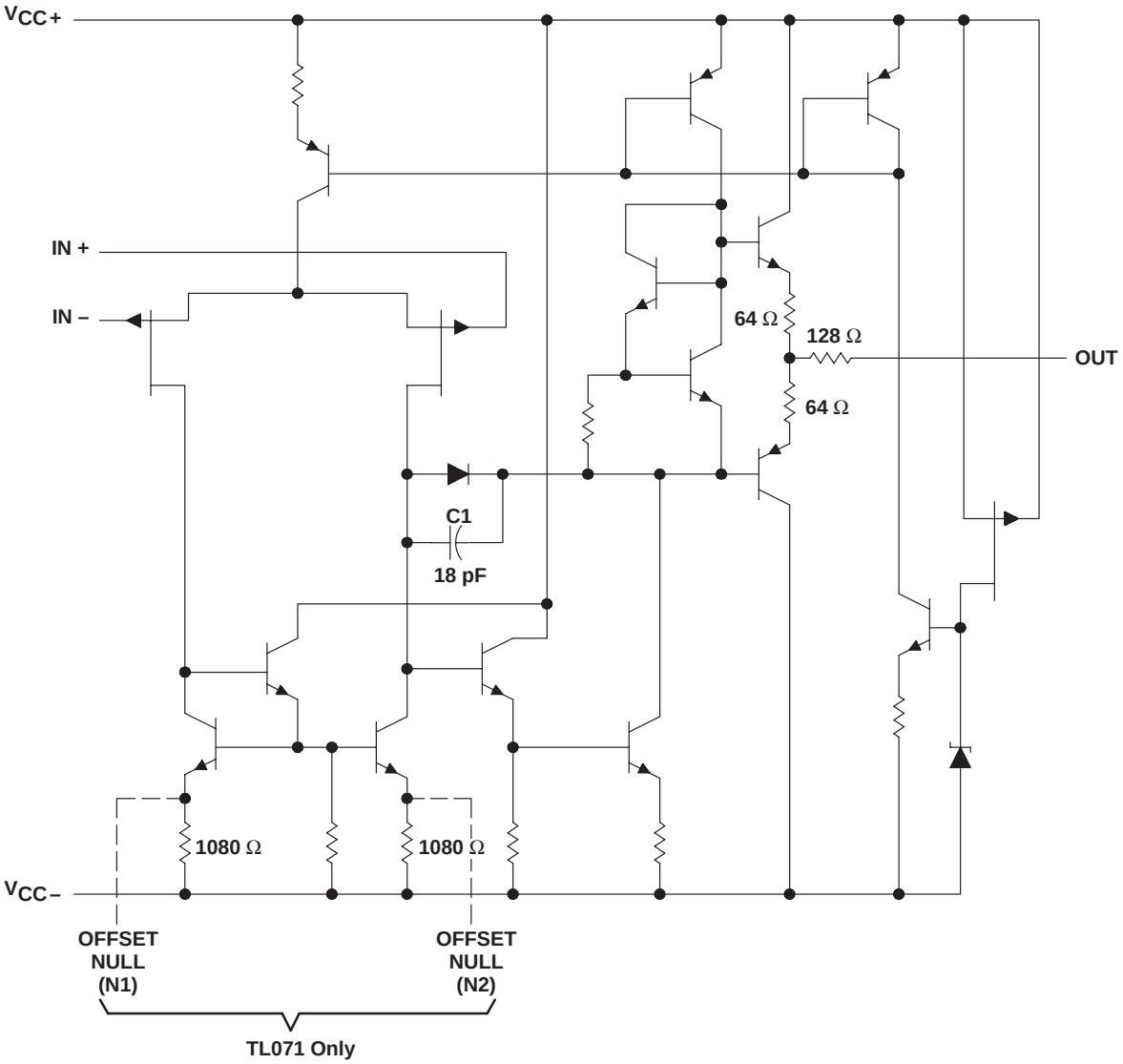

All component values shown are nominal.

COMPONENT COUNT†			
COMPONENT TYPE	TL071	TL072	TL074
Resistors	11	22	44
Transistors	14	28	56
JFET	2	4	6
Diodes	1	2	4
Capacitors	1	2	4
epi-FET	1	2	4

† Includes bias and trim circuitry

absolute maximum ratings over operating free-air temperature range (unless otherwise noted)†

Supply voltage, V_{CC+} (see Note 1) . . . . . 18 V
Supply voltage, V_{CC-} (see Note 1) . . . . . –18 V
Differential input voltage, V_{ID} (see Note 2) . . . . . ±30 V
Input voltage, V_I (see Notes 1 and 3) . . . . . ±15 V
Duration of output short circuit (see Note 4) . . . . . unlimited
Continuous total power dissipation . . . . . See Dissipation Rating Table
Operating free-air temperature range, T_A: C suffix . . . . . 0°C to 70°C
I suffix . . . . . –40°C to 85°C
M suffix . . . . . –55°C to 125°C
Storage temperature range . . . . . –65°C to 150°C
Case temperature for 60 seconds: FK package . . . . . 260°C
Lead temperature 1,6 mm (1/16 inch) from case for 10 seconds: J, JG, or W package . . . . . 300°C
Lead temperature 1,6 mm (1/16 inch) from case for 10 seconds: D, N, P, or PW package . . . . . 260°C

† Stresses beyond those listed under “absolute maximum ratings” may cause permanent damage to the device. These are stress ratings only, and functional operation of the device at these or any other conditions beyond those indicated under “recommended operating conditions” is not implied. Exposure to absolute-maximum-rated conditions for extended periods may affect device reliability.

NOTES:
1. All voltage values, except differential voltages, are with respect to the midpoint between V_{CC+} and V_{CC-}.
2. Differential voltages are at IN+ with respect to IN–.
3. The magnitude of the input voltage must never exceed the magnitude of the supply voltage or 15 V, whichever is less.
4. The output may be shorted to ground or to either supply. Temperature and/or supply voltages must be limited to ensure that the dissipation rating is not exceeded.

DISSIPATION RATING TABLE

PACKAGE	$T_A \le 25°C$ POWER RATING	DERATING FACTOR	DERATE ABOVE T_A	$T_A = 70°C$ POWER RATING	$T_A = 85°C$ POWER RATING	$T_A = 125°C$ POWER RATING
D (8 pin)	680 mW	5.8 mW/°C	33°C	465 mW	378 mW	N/A
D (14 pin)	680 mW	7.6 mW/°C	60°C	604 mW	490 mW	N/A
FK	680 mW	11.0 mW/°C	88°C	680 mW	680 mW	273 mW
J	680 mW	11.0 mW/°C	88°C	680 mW	680 mW	273 mW
JG	680 mW	8.4 mW/°C	69°C	672 mW	546 mW	210 mW
N	680 mW	9.2 mW/°C	76°C	680 mW	597 mW	N/A
P	680 mW	8.0 mW/°C	65°C	640 mW	520 mW	N/A
PW (8 pin)	525 mW	4.2 mW/°C	70°C	525 mW	N/A	N/A
PW (14 pin)	700 mW	5.6 mW/°C	70°C	700 mW	N/A	N/A
W	680 mW	8.0 mW/°C	65°C	640 mW	520 mW	200 mW

electrical characteristics, $V_{CC\pm}$ = ±15 V (unless otherwise noted)

PARAMETER		TEST CONDITIONS†	T_A‡	TL071C TL072C TL074C			TL071AC TL072AC TL074AC			TL071BC TL072BC TL074BC			TL071I TL072I TL074I			UNIT
				MIN	TYP	MAX	MIN	TYP	MAX	MIN	TYP	MAX	MIN	TYP	MAX	
V_{IO}	Input offset voltage	V_O = 0, R_S = 50 Ω	25°C		3	10		3	6		2	3		3	6	mV
			Full range			13			7.5			5			8	
α_{VIO}	Temperature coefficient of input offset voltage	V_O = 0, R_S = 50 Ω	Full range		18			18			18			18		µV/°C
I_{IO}	Input offset current	V_O = 0	25°C		5	100		5	100		5	100		5	100	pA
			Full range			10			2			2			2	nA
I_{IB}	Input bias current§	V_O = 0	25°C		65	200		65	200		65	200		65	200	pA
			Full range			7			7			7			20	nA
V_{ICR}	Common-mode input voltage range		25°C	±11	–12 to 15		±11	–12 to 15		±11	–12 to 15		±11	–12 to 15		V
V_{OM}	Maximum peak output voltage swing	R_L = 10 kΩ	25°C	±12	±13.5		±12	±13.5		±12	±13.5		±12	±13.5		V
		R_L ≥ 10 kΩ	Full range	±12			±12			±12			±12			
		R_L ≥ 2 kΩ		±10			±10			±10			±10			
A_{VD}	Large-signal differential voltage amplification	V_O = ±10 V, R_L ≥ 2 kΩ	25°C	25	200		50	200		50	200		50	200		V/mV
			Full range	15			25			25			25			
B_1	Unity-gain bandwidth		25°C		3			3			3			3		MHz
r_i	Input resistance		25°C		10^{12}			10^{12}			10^{12}			10^{12}		Ω
CMRR	Common-mode rejection ratio	V_{IC} = V_{ICR}min, V_O = 0, R_S = 50 Ω	25°C	70	100		75	100		75	100		75	100		dB
k_{SVR}	Supply-voltage rejection ratio ($\Delta V_{CC\pm}/\Delta V_{IO}$)	V_{CC} = ±9 V to ±15 V, V_O = 0, R_S = 50 Ω	25°C	70	100		80	100		80	100		80	100		dB
I_{CC}	Supply current (each amplifier)	V_O = 0, No load	25°C		1.4	2.5		1.4	2.5		1.4	2.5		1.4	2.5	mA
V_{O1}/V_{O2}	Crosstalk attenuation	A_{VD} = 100	25°C		120			120			120			120		dB

† All characteristics are measured under open-loop conditions with zero common-mode voltage unless otherwise specified.
‡ Full range is T_A = 0°C to 70°C for TL07_C,TL07_AC, TL07_BC and is T_A = –40°C to 85°C for TL07_I.
§ Input bias currents of a FET-input operational amplifier are normal junction reverse currents, which are temperature sensitive as shown in Figure 4. Pulse techniques must be used that maintain the junction temperature as close to the ambient temperature as possible.

electrical characteristics, $V_{CC\pm}$ = ±15 V (unless otherwise noted)

PARAMETER		TEST CONDITIONS†		T_A‡	TL071M TL072M			TL074M			UNIT
					MIN	TYP	MAX	MIN	TYP	MAX	
V_{IO}	Input offset voltage	V_O = 0,	R_S = 50 Ω	25°C		3	6		3	9	mV
				Full range			9			15	
α_{VIO}	Temperature coefficient of input offset voltage	V_O = 0,	R_S = 50 Ω	Full range		18			18		μV/°C
I_{IO}	Input offset current	V_O = 0		25°C		5	100		5	100	pA
				Full range			20			20	nA
I_{IB}	Input bias current‡	V_O = 0		25°C		65	200		65	200	pA
							50			50	nA
V_{ICR}	Common-mode input voltage range			25°C	±11	–12 to 15		±11	–12 to 15		V
V_{OM}	Maximum peak output voltage swing	R_L = 10 kΩ		25°C	±12	±13.5		±12	±13.5		V
		R_L ≥ 10 kΩ		Full range	±12			±12			
		R_L ≥ 2 kΩ			±10			±10			
A_{VD}	Large-signal differential voltage amplification	V_O = ±10 V,	R_L ≥ 2 kΩ	25°C	35	200		35	200		V/mV
					15			15			
B_1	Unity-gain bandwidth	T_A = 25°C				3			3		MHz
r_i	Input resistance	T_A = 25°C				10^{12}			10^{12}		Ω
CMRR	Common-mode rejection ratio	V_{IC} = V_{ICR}min, V_O = 0,	R_S = 50 Ω	25°C	80	86		80	86		dB
k_{SVR}	Supply-voltage rejection ratio ($\Delta V_{CC\pm}/\Delta V_{IO}$)	V_{CC} = ±9 V to ±15 V, V_O = 0,	R_S = 50 Ω	25°C	80	86		80	86		dB
I_{CC}	Supply current (each amplifier)	V_O = 0,	No load	25°C		1.4	2.5		1.4	2.5	mA
V_{O1}/V_{O2}	Crosstalk attenuation	A_{VD} = 100		25°C		120			120		dB

† Input bias currents of a FET-input operational amplifier are normal junction reverse currents, which are temperature sensitive as shown in Figure 4. Pulse techniques must be used that will maintain the junction temperature as close to the ambient temperature as possible.

‡ All characteristics are measured under open-loop conditions with zero common-mode voltage unless otherwise specified. Full range is T_A = –55°C to 125°C.

operating characteristics, $V_{CC\pm} = \pm 15$ V, $T_A = 25°C$

PARAMETER		TEST CONDITIONS		TL07xM			ALL OTHERS			UNIT
				MIN	TYP	MAX	MIN	TYP	MAX	
SR	Slew rate at unity gain	V_I = 10 V, C_L = 100 pF,	R_L = 2 kΩ, See Figure 1	5	13		8	13		V/µs
t_r	Rise time overshoot factor	V_I = 20 mV, C_L = 100 pF,	R_L = 2 kΩ, See Figure 1		0.1			0.1		µs
					20%			20%		
V_n	Equivalent input noise voltage	R_S = 20 Ω	f = 1 kHz		18			18		nV/√Hz
			f = 10 Hz to 10 kHz		4			4		µV
I_n	Equivalent input noise current	R_S = 20 Ω,	f = 1 kHz		0.01			0.01		pA/√Hz
THD	Total harmonic distortion	$V_I$rms = 6 V, $R_L \geq 2$ kΩ, f = 1 kHz	A_{VD} = 1, $R_S \leq 1$ kΩ,		0.003%			0.003%		

PARAMETER MEASUREMENT INFORMATION

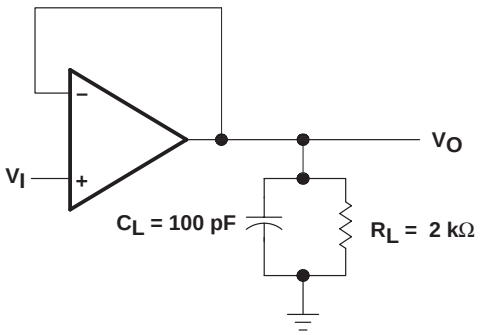

Figure 1. Unity-Gain Amplifier

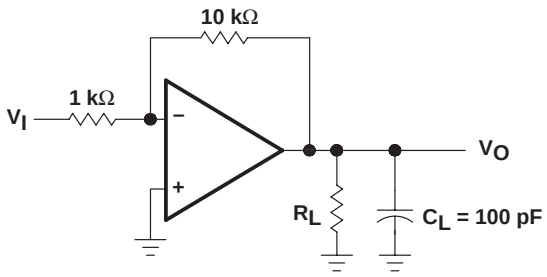

Figure 2. Gain-of-10 Inverting Amplifier

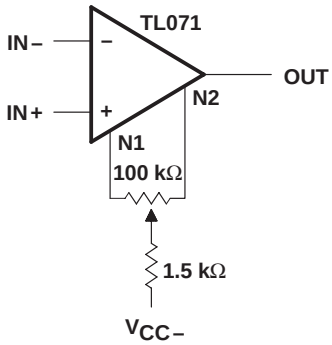

Figure 3. Input Offset Voltage Null Circuit

TYPICAL CHARACTERISTICS

Table of Graphs

			FIGURE
I_{IB}	Input bias current	vs Free-air temperature	4
V_{OM}	Maximum output voltage	vs Frequency vs Free-air temperature vs Load resistance vs Supply voltage	5, 6, 7 8 9 10
A_{VD}	Large-signal differential voltage amplification	vs Free-air temperature vs Frequency	11 12
	Phase shift	vs Frequency	12
	Normalized unity-gain bandwidth	vs Free-air temperature	13
	Normalized phase shift	vs Free-air temperature	13
CMRR	Common-mode rejection ratio	vs Free-air temperature	14
I_{CC}	Supply current	vs Supply voltage vs Free-air temperature	15 16
P_D	Total power dissipation	vs Free-air temperature	17
	Normalized slew rate	vs Free-air temperature	18
V_n	Equivalent input noise voltage	vs Frequency	19
THD	Total harmonic distortion	vs Frequency	20
	Large-signal pulse response	vs Time	21
V_O	Output voltage	vs Elapsed time	22

TYPICAL CHARACTERISTICS†

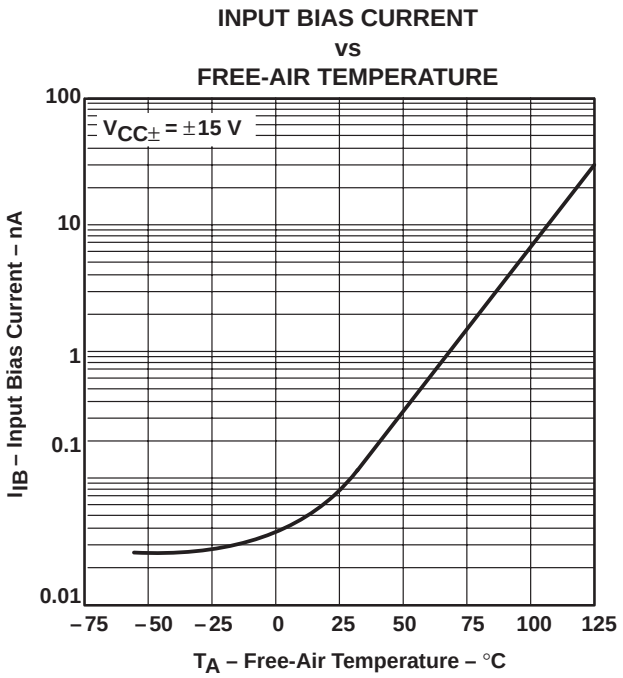

Figure 4

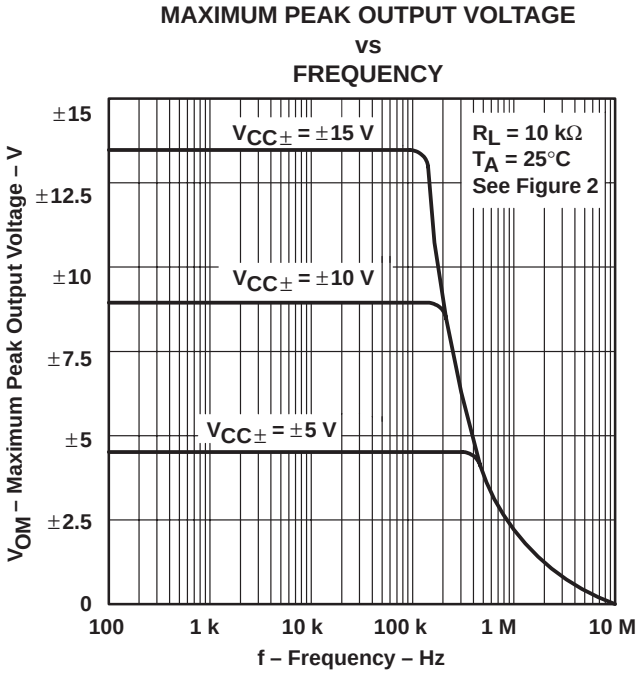

Figure 5

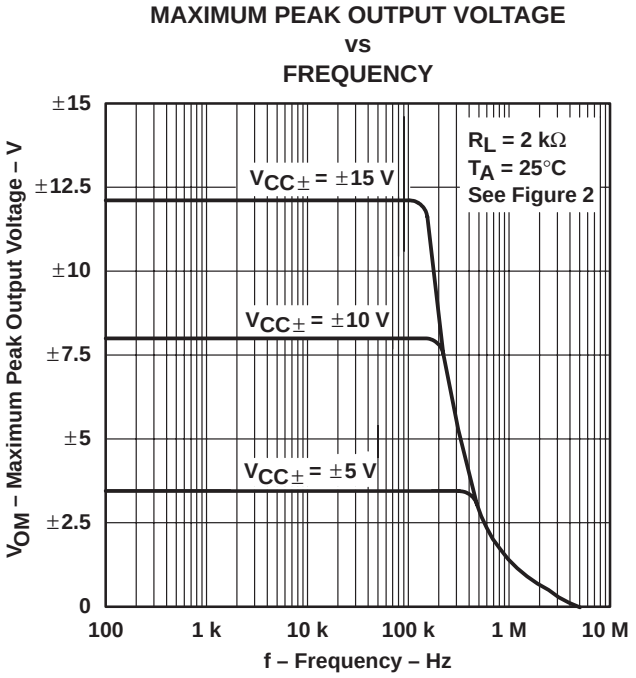

Figure 6

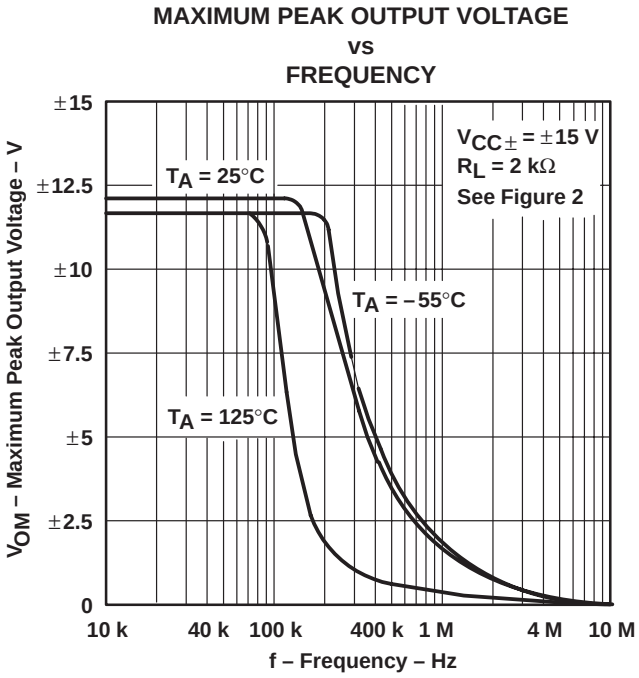

Figure 7

† Data at high and low temperatures are applicable only within the rated operating free-air temperature ranges of the various devices.

TYPICAL CHARACTERISTICS†

MAXIMUM PEAK OUTPUT VOLTAGE vs FREE-AIR TEMPERATURE

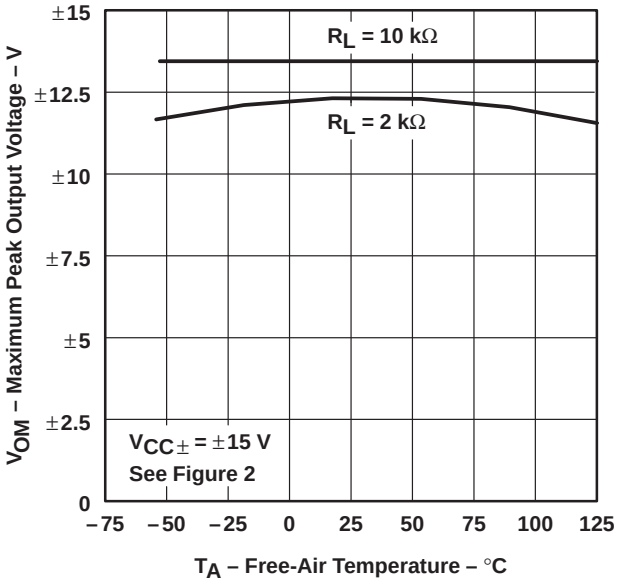

Figure 8

MAXIMUM PEAK OUTPUT VOLTAGE vs LOAD RESISTANCE

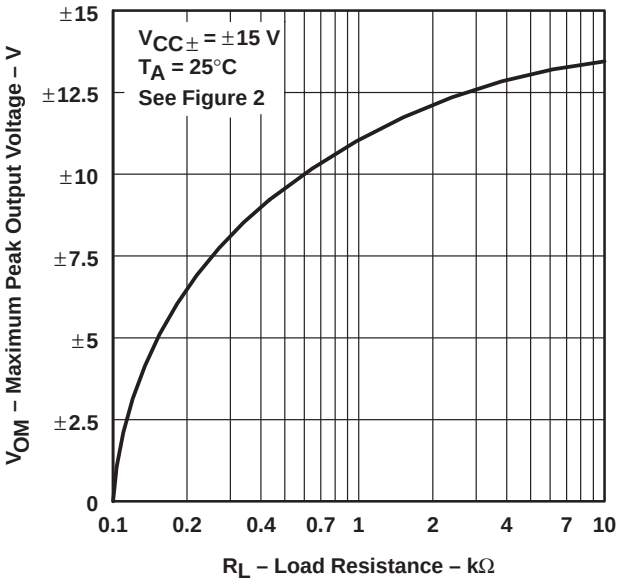

Figure 9

MAXIMUM PEAK OUTPUT VOLTAGE vs SUPPLY VOLTAGE

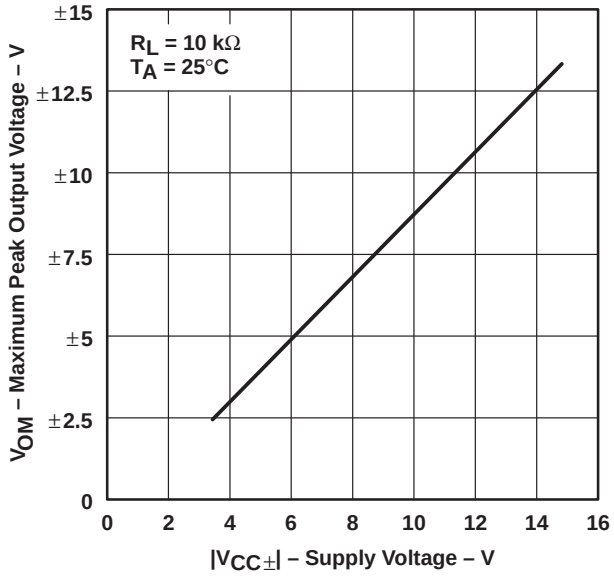

Figure 10

LARGE-SIGNAL DIFFERENTIAL VOLTAGE AMPLIFICATION vs FREE-AIR TEMPERATURE

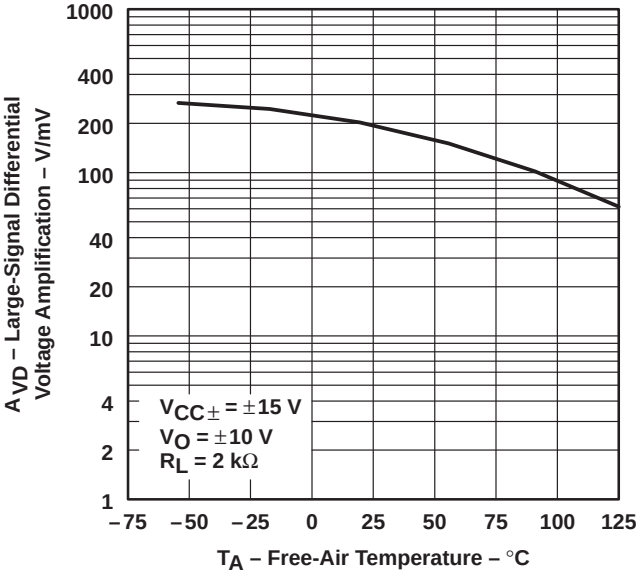

Figure 11

† Data at high and low temperatures are applicable only within the rated operating free-air temperature ranges of the various devices.

TYPICAL CHARACTERISTICS†

LARGE-SIGNAL DIFFERENTIAL VOLTAGE AMPLIFICATION AND PHASE SHIFT vs FREQUENCY

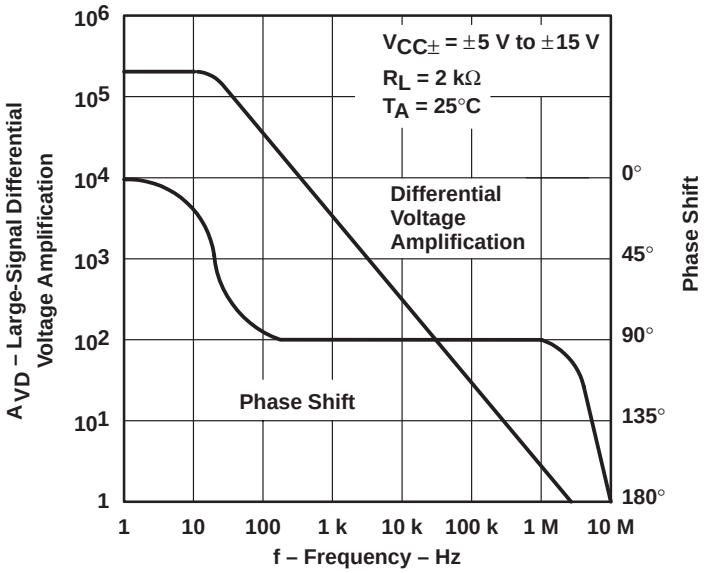

Figure 12

NORMALIZED UNITY-GAIN BANDWIDTH AND PHASE SHIFT vs FREE-AIR TEMPERATURE

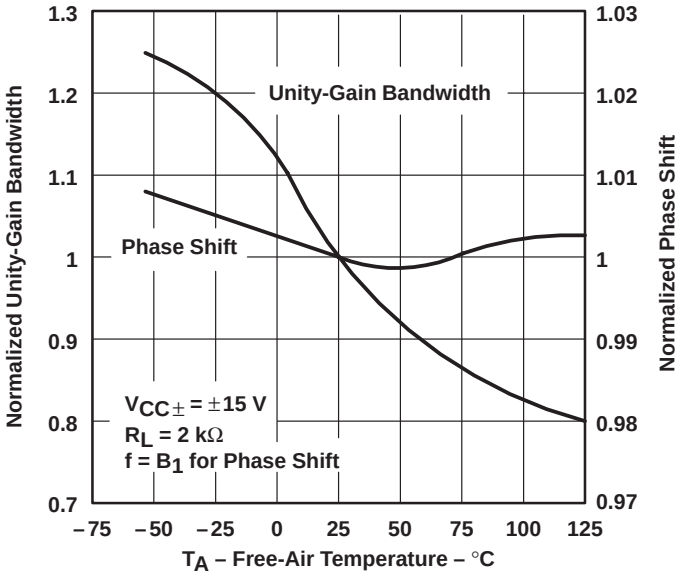

Figure 13

† Data at high and low temperatures are applicable only within the rated operating free-air temperature ranges of the various devices.

TYPICAL CHARACTERISTICS†

COMMON-MODE REJECTION RATIO vs FREE-AIR TEMPERATURE

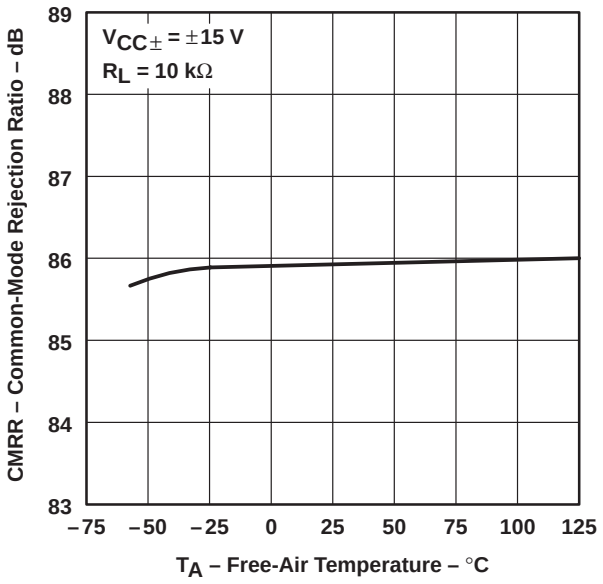

Figure 14

SUPPLY CURRENT PER AMPLIFIER vs SUPPLY VOLTAGE

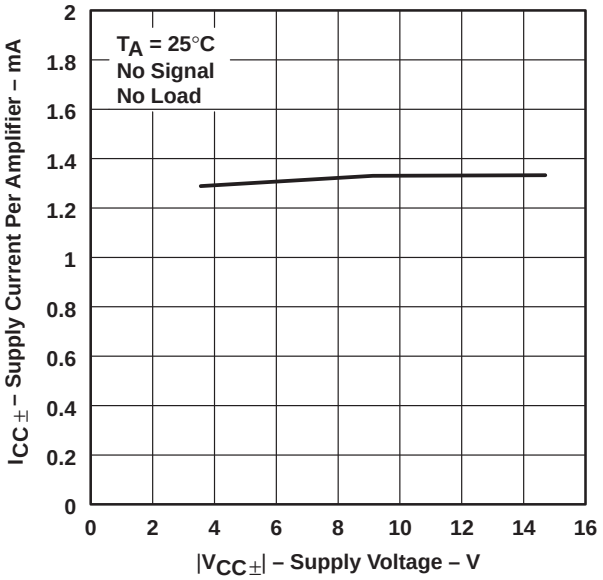

Figure 15

SUPPLY CURRENT PER AMPLIFIER vs FREE-AIR TEMPERATURE

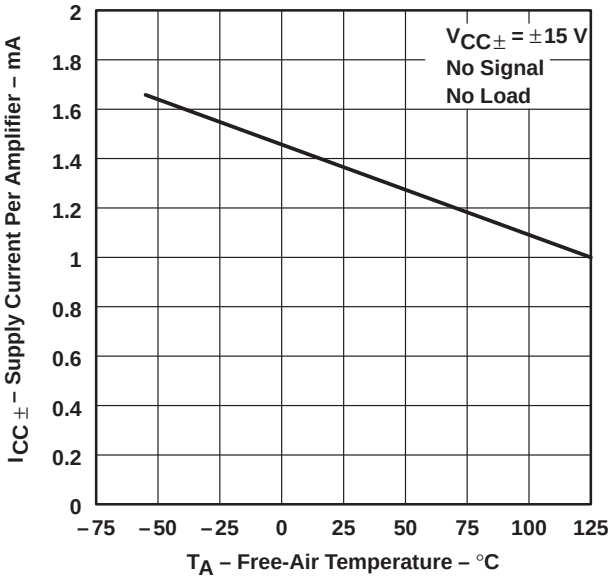

Figure 16

TOTAL POWER DISSIPATION vs FREE-AIR TEMPERATURE

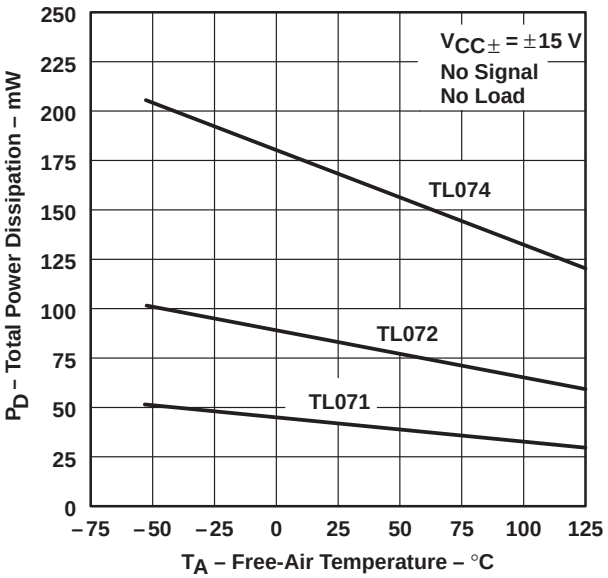

Figure 17

† Data at high and low temperatures are applicable only within the rated operating free-air temperature ranges of the various devices.

TYPICAL CHARACTERISTICS

NORMALIZED SLEW RATE vs FREE-AIR TEMPERATURE

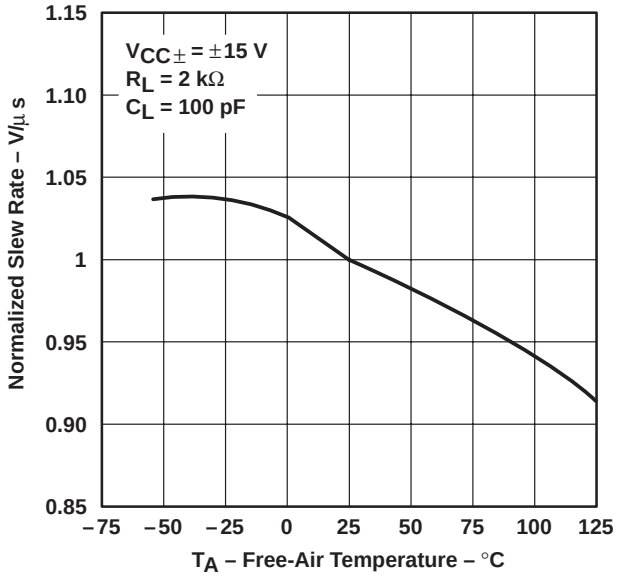

Figure 18

EQUIVALENT INPUT NOISE VOLTAGE vs FREQUENCY

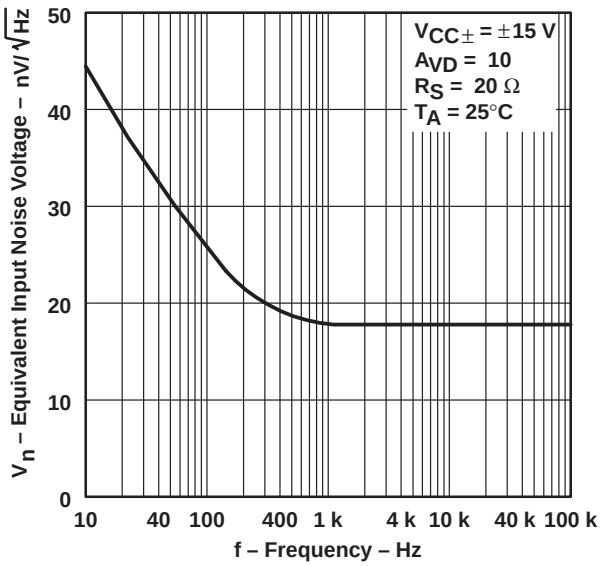

Figure 19

TOTAL HARMONIC DISTORTION vs FREQUENCY

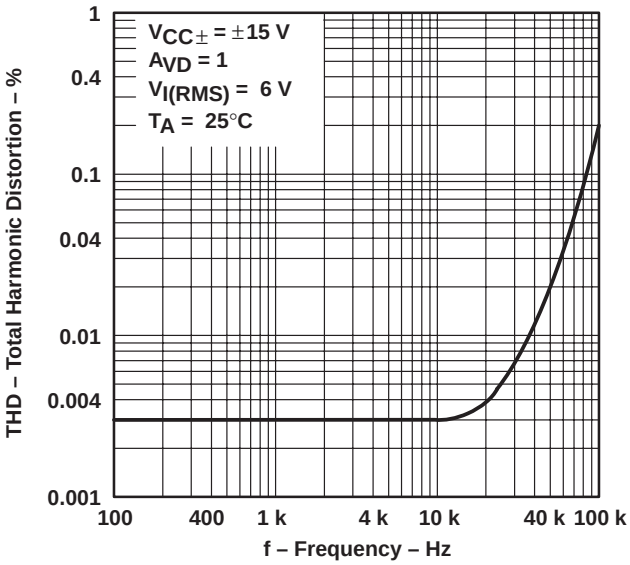

Figure 20

VOLTAGE-FOLLOWER LARGE-SIGNAL PULSE RESPONSE

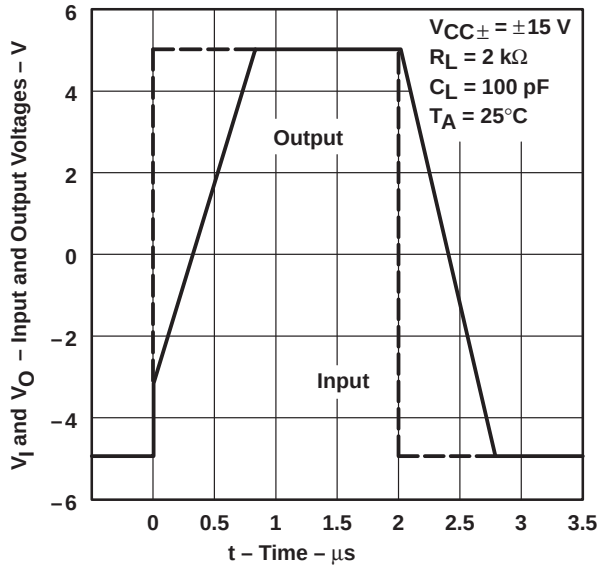

Figure 21

TYPICAL CHARACTERISTICS

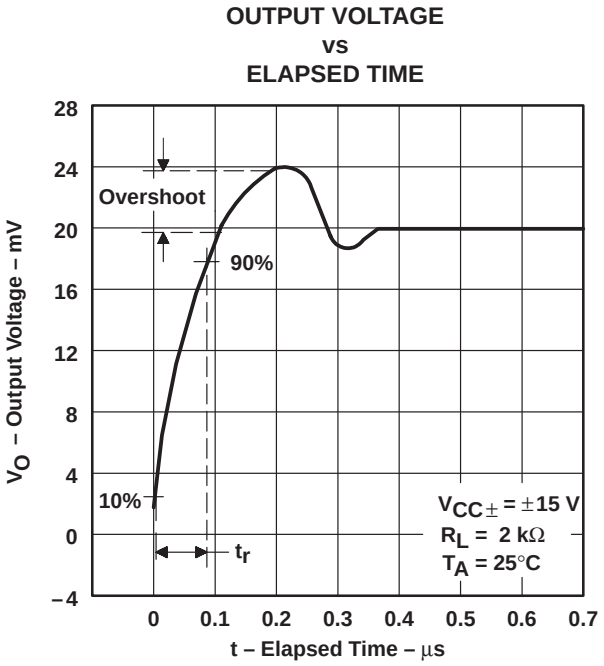

Figure 22

APPLICATION INFORMATION

Table of Application Diagrams

APPLICATION DIAGRAM	PART NUMBER	FIGURE
0.5-Hz square-wave oscillator	TL071	23
High-Q notch filter	TL071	24
Audio-distribution amplifier	TL074	25
100-kHz quadrature oscillator	TL072	26
AC amplifier	TL071	27

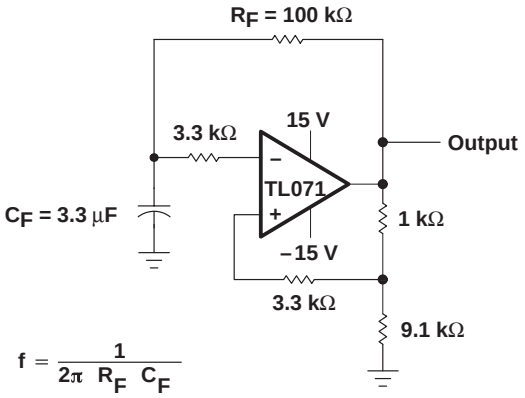

Figure 23. 0.5-Hz Square-Wave Oscillator

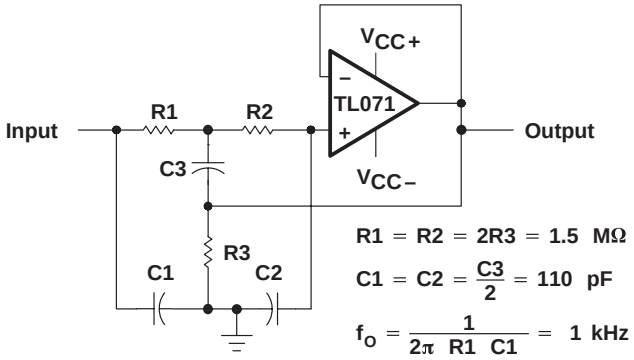

Figure 24. High-Q Notch Filter

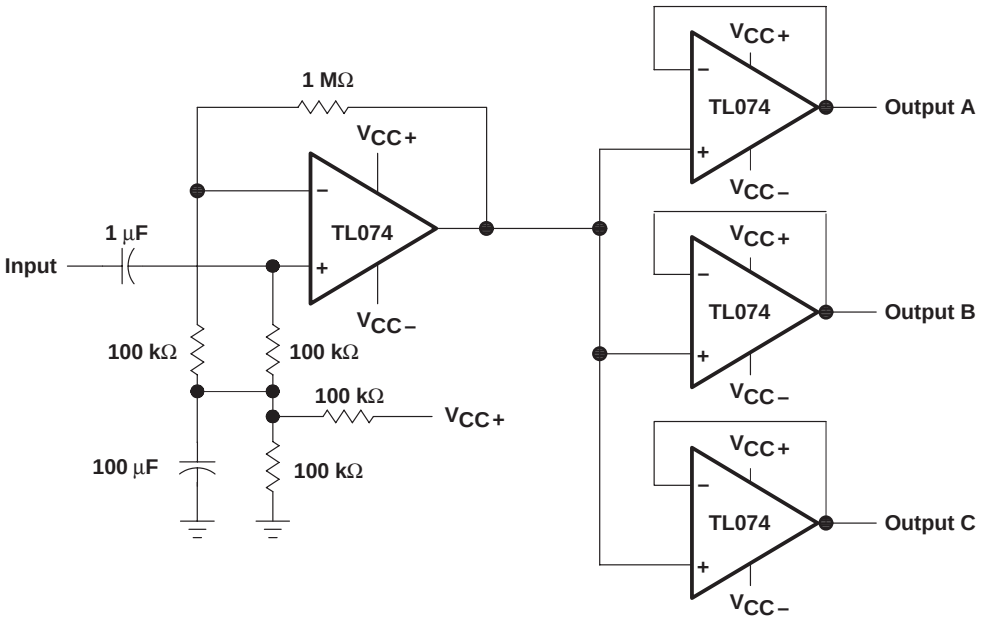

Figure 25. Audio-Distribution Amplifier

APPLICATION INFORMATION

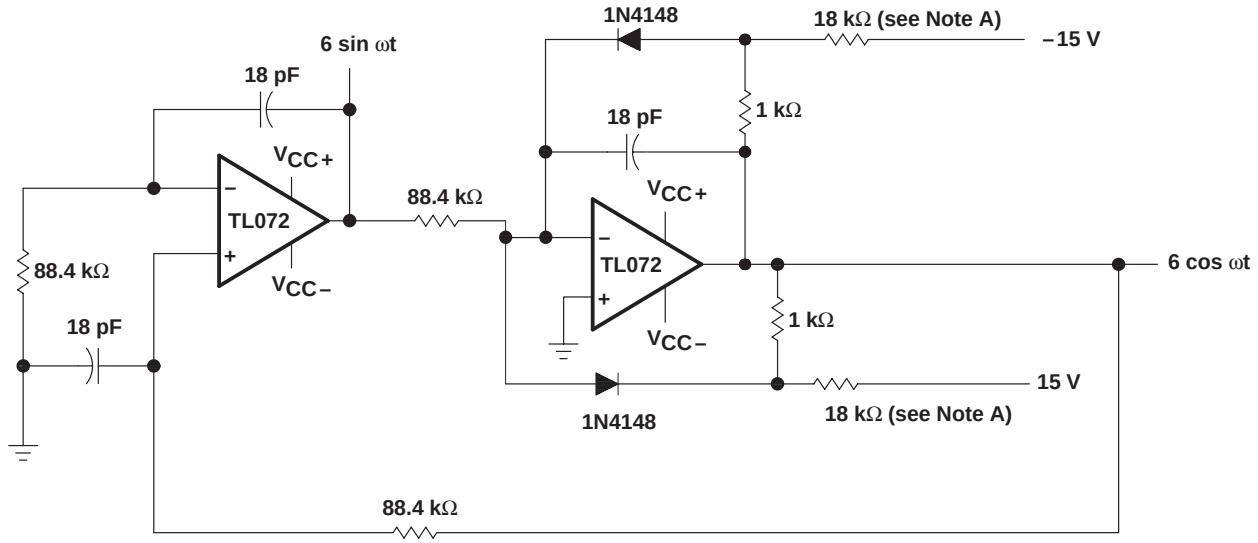

NOTE A: These resistor values may be adjusted for a symmetrical output.

Figure 26. 100-kHz Quadrature Oscillator

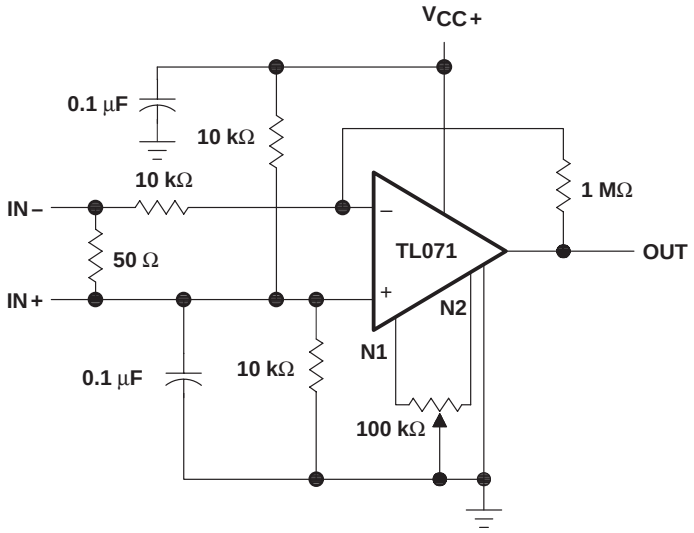

Figure 27. AC Amplifier

IMPORTANT NOTICE

Texas Instruments and its subsidiaries (TI) reserve the right to make changes to their products or to discontinue any product or service without notice, and advise customers to obtain the latest version of relevant information to verify, before placing orders, that information being relied on is current and complete. All products are sold subject to the terms and conditions of sale supplied at the time of order acknowledgement, including those pertaining to warranty, patent infringement, and limitation of liability.

TI warrants performance of its semiconductor products to the specifications applicable at the time of sale in accordance with TI's standard warranty. Testing and other quality control techniques are utilized to the extent TI deems necessary to support this warranty. Specific testing of all parameters of each device is not necessarily performed, except those mandated by government requirements.

CERTAIN APPLICATIONS USING SEMICONDUCTOR PRODUCTS MAY INVOLVE POTENTIAL RISKS OF DEATH, PERSONAL INJURY, OR SEVERE PROPERTY OR ENVIRONMENTAL DAMAGE ("CRITICAL APPLICATIONS"). TI SEMICONDUCTOR PRODUCTS ARE NOT DESIGNED, AUTHORIZED, OR WARRANTED TO BE SUITABLE FOR USE IN LIFE-SUPPORT DEVICES OR SYSTEMS OR OTHER CRITICAL APPLICATIONS. INCLUSION OF TI PRODUCTS IN SUCH APPLICATIONS IS UNDERSTOOD TO BE FULLY AT THE CUSTOMER'S RISK.

In order to minimize risks associated with the customer's applications, adequate design and operating safeguards must be provided by the customer to minimize inherent or procedural hazards.

TI assumes no liability for applications assistance or customer product design. TI does not warrant or represent that any license, either express or implied, is granted under any patent right, copyright, mask work right, or other intellectual property right of TI covering or relating to any combination, machine, or process in which such semiconductor products or services might be or are used. TI's publication of information regarding any third party's products or services does not constitute TI's approval, warranty or endorsement thereof.

Copyright © 1998, Texas Instruments Incorporated

This datasheet has been download from:

www.datasheetcatalog.com

Datasheets for electronics components.