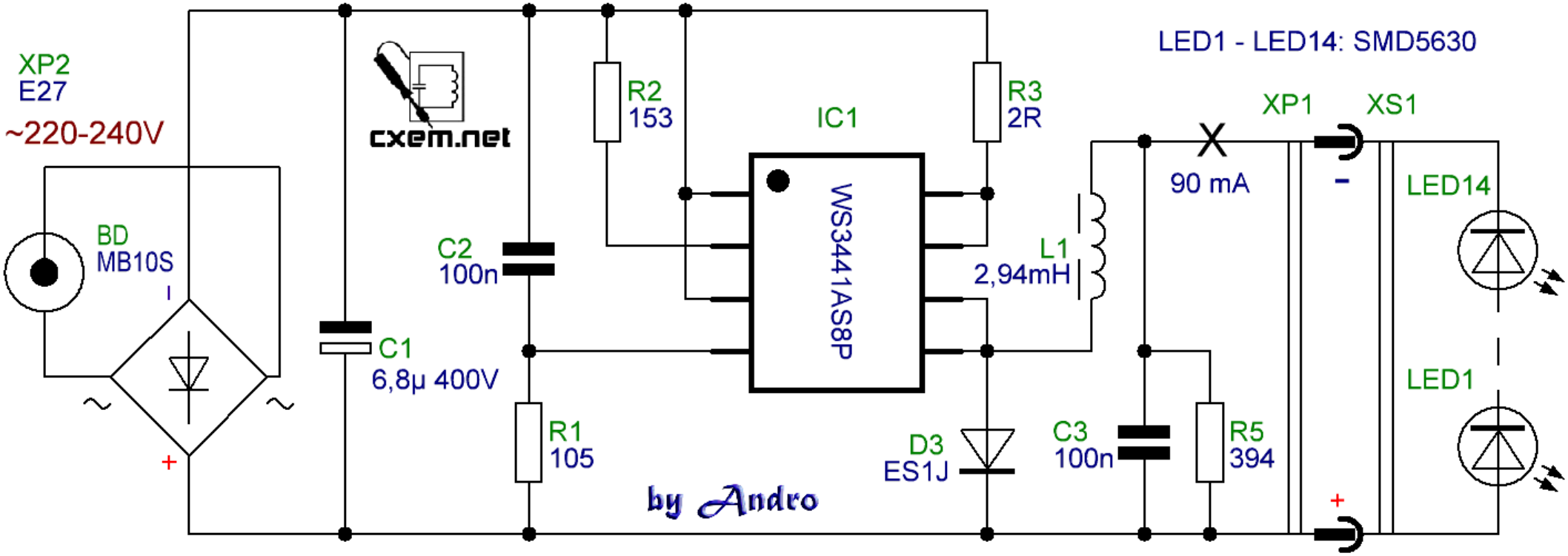6W LED LAMP on the IC WS3441AS8P