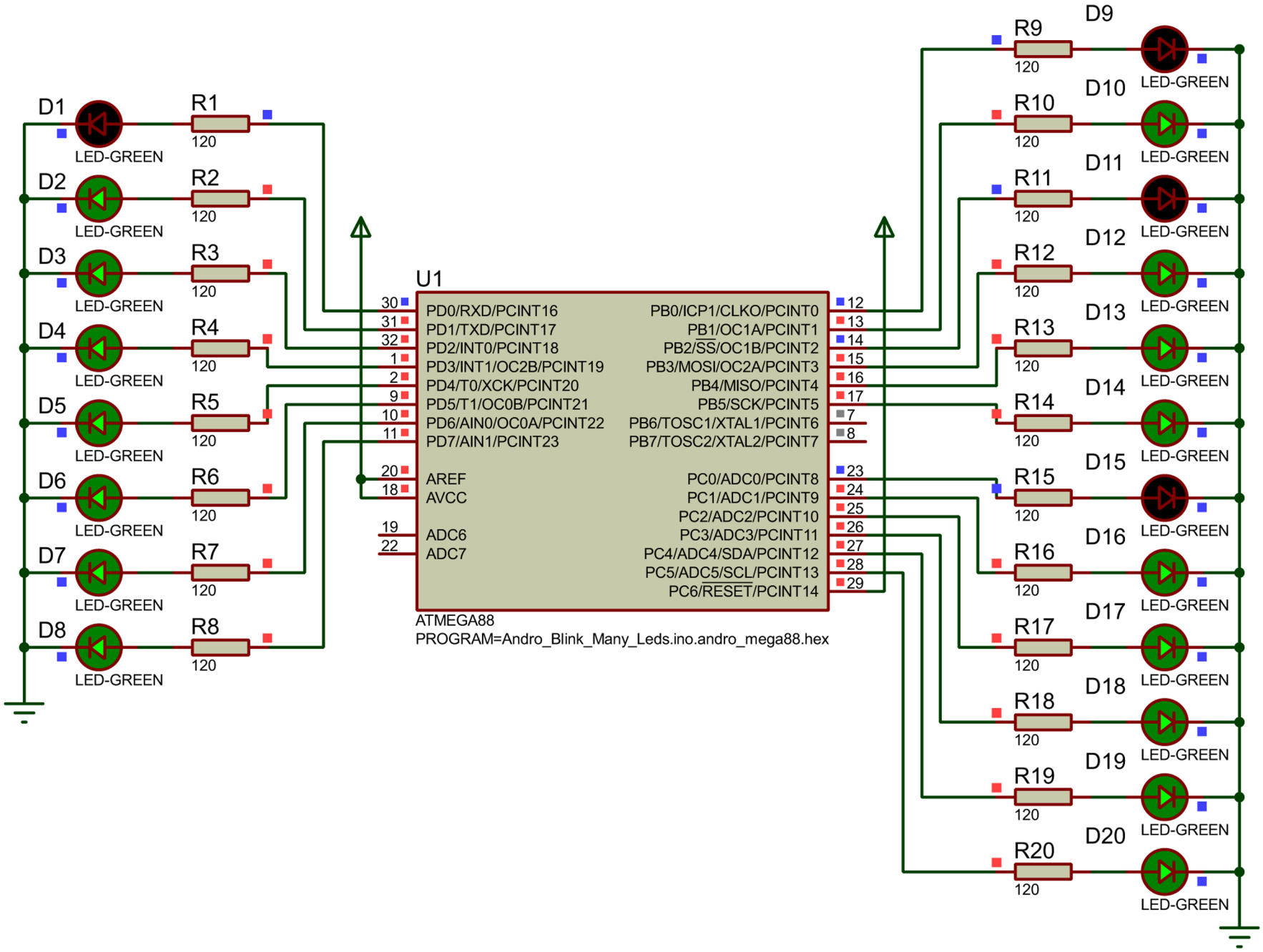
D1
LED-GREEN
R1
120
D2
LED-GREEN
R2
120
D3
LED-GREEN
R3
120
D4
LED-GREEN
R4
120
D5
LED-GREEN
R5
120
D6
LED-GREEN
R6
120
D7
LED-GREEN
R7
120
D8
LED-GREEN
R8
120
U1
30 PD0/RXD/PCINT16
31 PD1/TXD/PCINT17
32 PD2/INT0/PCINT18
1 PD3/INT1/OC2B/PCINT19
2 PD4/T0/XCK/PCINT20
9 PD5/T1/OC0B/PCINT21
10 PD6/AIN0/OC0A/PCINT22
11 PD7/AIN1/PCINT23
20 AREF
18 AVCC
19 ADC6
22 ADC7
12 PB0/ICP1/CLKO/PCINT0
13 PB1/OC1A/PCINT1
14 PB2/SS/OC1B/PCINT2
15 PB3/MOSI/OC2A/PCINT3
16 PB4/MISO/PCINT4
17 PB5/SCK/PCINT5
7 PB6/TOSC1/XTAL1/PCINT6
8 PB7/TOSC2/XTAL2/PCINT7
23 PC0/ADC0/PCINT8
24 PC1/ADC1/PCINT9
25 PC2/ADC2/PCINT10
26 PC3/ADC3/PCINT11
27 PC4/ADC4/SDA/PCINT12
28 PC5/ADC5/SCL/PCINT13
29 PC6/RESET/PCINT14
ATMEGA88
PROGRAM=Andro_Blink_Many_Leds.ino.andro_mega88.hex
R9
120
D9
LED-GREEN
R10
120
D10
LED-GREEN
R11
120
D11
LED-GREEN
R12
120
D12
LED-GREEN
R13
120
D13
LED-GREEN
R14
120
D14
LED-GREEN
R15
120
D15
LED-GREEN
R16
120
D16
LED-GREEN
R17
120
D17
LED-GREEN
R18
120
D18
LED-GREEN
R19
120
D19
LED-GREEN
R20
120
D20
LED-GREEN